Power Diagram

Below is the current power diagram for all of the devices in the submarine.

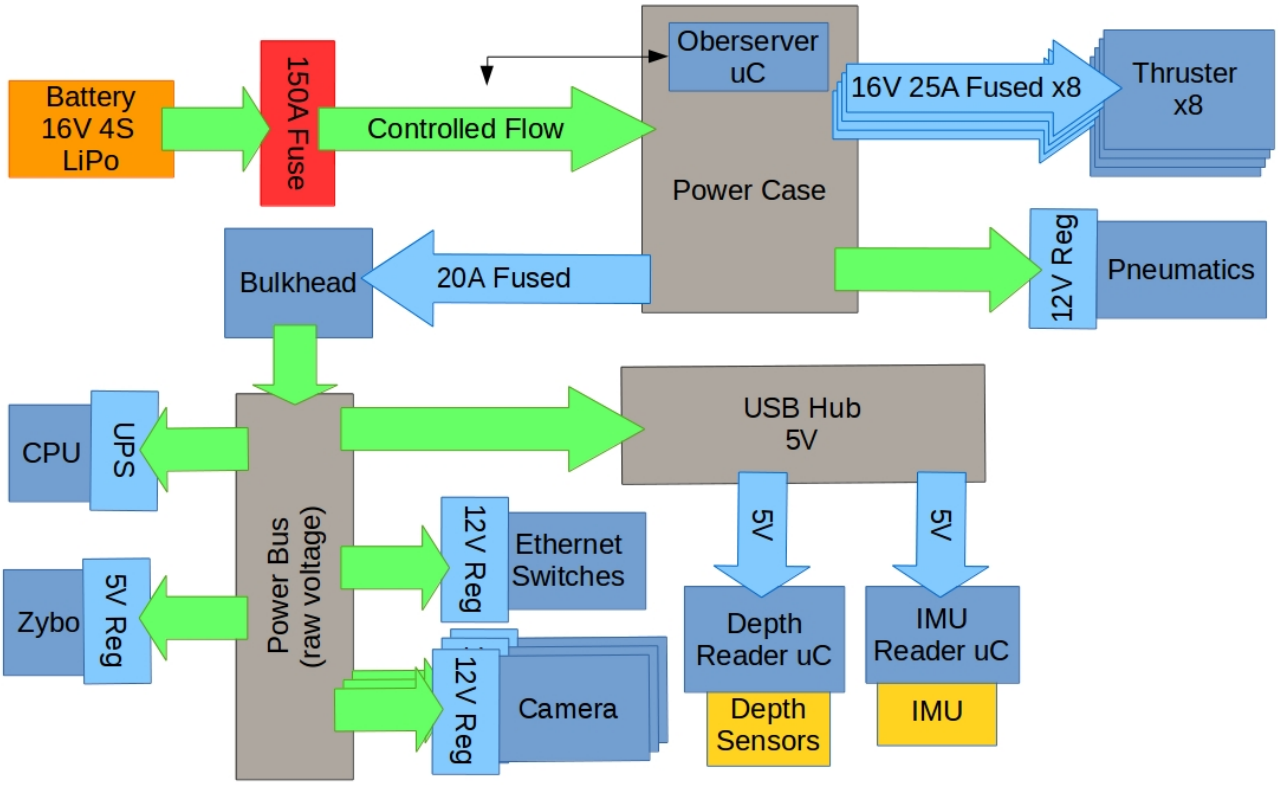

From:
http://robosub-old.eecs.wsu.edu/wiki/ - **Palouse RoboSub Technical Documentation**

Permanent link:
http://robosub-old.eecs.wsu.edu/wiki/ee/power/power_diagram/start?rev=1473714929

Last update: **2016/09/12 14:15**